Elements of Information Technology
I Year I Semester

Unit – I

Introduction to Computers: Definition, Characteristics & Limitations of Computers, Functional Block Diagram of Digital Computer, Functions Of Control Unit and ALU in CPU Concepts Of Primary and Secondary Memory, Input / Output Devices.

Introduction to Computers:

Meaning of a Computer:
Computer is a machine that can solve problems by accepting data performing certain operations and presenting the results of those operations under the direction of detailed step-by-step instructions. Such a set of sequenced instructions, which cause a computer to perform particular operations, is called a **program.** The term computer has been derived from the word "COMPUTE" which means calculate.

Definition of a computer

Computer is an electronic device, used for performing calculations and controlling operations that be expressed in either logical or numerical terms.

- It stores and process data in binary form according to instructions given to it in a variable program.
- Computer need to be told exactly what to do and how to do to accomplish a task
- It is a combination of hardware and software
- Software is the set of instructions given to the computer to perform a task
- The physical parts that make up computer are called hardware, which are made of circuits and transistors

The three main operations of computer are

1) Takes in data and instructions (input)
2) works with the data (processing)
3) puts out information (output)

Characteristics of a Computer:

The following are the main characteristics of a computer-

1. **Speed:** Computer is able to process the data and give the output in fractions of seconds such that required information is available to the user on time and hence enables him to take right decisions at the right time.
2. **Accuracy**: Computer is error free. There is no scope for inaccuracy in the results given by the computer. Incorrect calculations, errors, mistake do not take place in a computer system. If there, errors they are due to the errors in the instructions given by the programmer, inaccurate data, inconsistent data or defective programs as well as defective system designs. Since the computer is capable of doing only what it is instructed to do, fault instructions for data processing may lead to faulty results this is known as GIGO (Garbage In Garbage Out)
3. **Reliable:** Today, computer is extensively used because of their reliability. The output generated by the computer is very reliable to the extent that the input is reliable.

4. **Storage capacity:** Another important characteristic of a computer is that it has brain of its own with brilliant memory. It can accept and store any information for a long time. It stores large amount of data, can recall information instantly. The main memory of the computer is relatively small, and holds certain amount of information. Therefore the data is stored in secondary memory
5. **Versatile:** The computer performs three basic operations. It accepts information from the user; secondly, it performs the basic arithmetic operations and logical operations and finally generates the desired output in the desired form.
6. **Automatic (Programmable):** Computer is a device, which is more than a calculator. Once instructions are given to the system it works automatically without any human intervention until the completion of program until it meets logical instruction to terminate the job.
7. **Diligent:** A computer is a device, which is indefatigable (untiring) and therefore does not feel tired nor gets distracted like a human being. All the instructions are performed at same speed and accuracy
8. **Recreation:** In recent years, computers were used mainly for entertainment and amusement, like computer games and other programs, computer animation gives life and movement to inanimate objects. Multimedia too helped in popularizing the use of computers.
9. **Networking capacity:** A computer can be connected with other computers. This feature of connectivity with other computers leads to the evolution of computer networking.
10. **Compactness:** Now a day's size of computers has decreased o lot due to increased technology. The laptop and Notebook computers can be taken outside.

Limitations of A Computer:

Like any modern technology computers is also not free from limitations-

- Computer is a machine and therefore it is only a device that needs human skill to operate.
- It does not work on its own and needs set of instructions to be given.
- It does not have natural intelligence and hence has to be instructed about every step in detail.
- It is not a decision maker and has to be programmed to take an action if some conditions prevail.
- Finally, it does not learn by experience unlike intelligent human beings.

Elements of a Computer:

A computer consists of three basic elements/components such as hardware, software and memory.

Hardware:

- ✓ The physical devices that make up a computer are referred to as hardware.
- ✓ It includes the tangible aspects of computers and can be touched such as mouse, printers, monitor, microphone, scanner etc.
- ✓ Hardware is usually used for input and output purposes. It takes instructions from the user from input devices such as mouse, key board etc and displays the output (after processing) on the other hardware devices such as monitor, LCDs, scanner, printers etc.

Software:

- ✓ The software of the computer includes operating system, which executes all the programs and instructions given by the user.

✓ The computer software itself is categorized into two

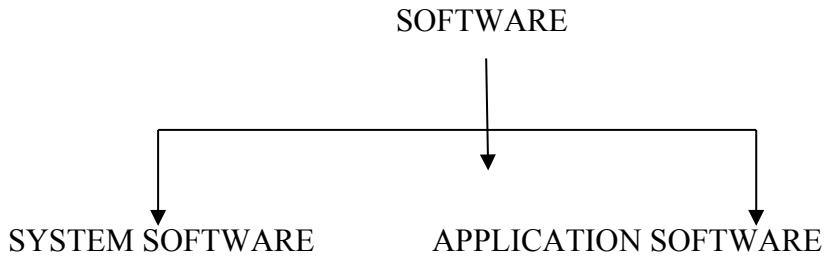

1. System Software

- It is collection of programs designed to operate, control, and extend the processing capabilities of the computer itself. System software are generally prepared by computer manufactures. These software products comprise of programs written in low-level languages, which interact with the hardware at a very basic level. System software serves as the interface between hardware and the end users.
- Includes the software execution by the computer itself such as Windows and DOS.

2. Application Software

- Application software products are designed to satisfy a particular need of a particular environment.
- Application software may consist of a single program, such as a Microsoft's notepad for writing and editing simple text. It may also consist of a collection of programs, often called a software package, which work together to accomplish a task, such as a spreadsheet package.

Memory:

- The memory of the computer can also be categorized under hardware but sometimes it is considered as a separate element of the computer system.
- Memory allows the user to store the data and processes performed by the computer.
- Memory is divided mainly into RAM, ROM and secondary storage devices.
- All these components are essential for the effective functioning of computer system Central Processing Unit (CPU).

FUNCTIONAL BLOCK DIAGRAM OF COMPUTER:

- A Computer, like a human brain, receives data and instruction, stores them and processes the data according to the instructions given to it.
- It receives data from input devices, stores them in memory and displays them through on an output device

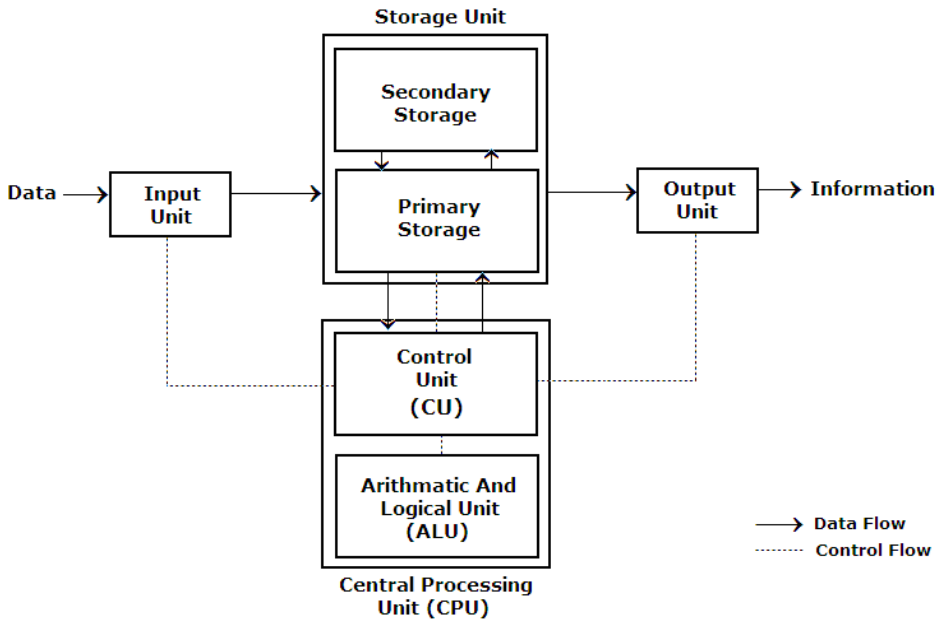

Central Processing Unit (CPU)

CPU is the component of computer system with the circuitry to control interpretation and execution of instructions. It performs the process in parts of Input-Process-Output cycle. The components of CPU are mounted (Fixed) on the main circuit board, called the "motherboard".

The various components of a Central Processing Unit are:

1. Arithmetic Logic Unit (ALU).
2. Control Unit.

Arithmetic and Logic Unit (ALU)

- It is that part of CPU where actual data processing occurs.
- All mathematical operations (+, -, *, /) and all comparisons (>, <, =) take place in this unit.
- In addition to arithmetic functions, the ALU also performs logic functions.
- A logic function is one where numbers or conditions are compared to each other.
- Circuits in the ALU are generally used to compare two numbers by subtracting one from the other.
- The sign (negative or positive) and the value of the difference tell the processor that the first number is equal to, less than, or greater than the second number.
- Alphabetic data may also be compared according to an assigned order sequence.

Control Unit

- It is a component of CPU that control and coordinates the flow of data between different components of computer
- It interprets instructions it receives from memory and directs the sequence of events necessary to execute the instruction.
- Control Unit uses a system clock, which synchronizes (manage) all tasks by sending out electrical pulses.
- Clock speed (the number of pulses or clocks per second) is measured in Megahertz (MHz) and is the main element in determining the speed of the processor.

- Computer speed is also measured in the number of instructions completed per second, or Millions of instructions per second (MIPS).

MEMORY

The memory is that part of the computer where programs and data are stored. There are two types of memory:

1. Primary Memory
2. Secondary Memory

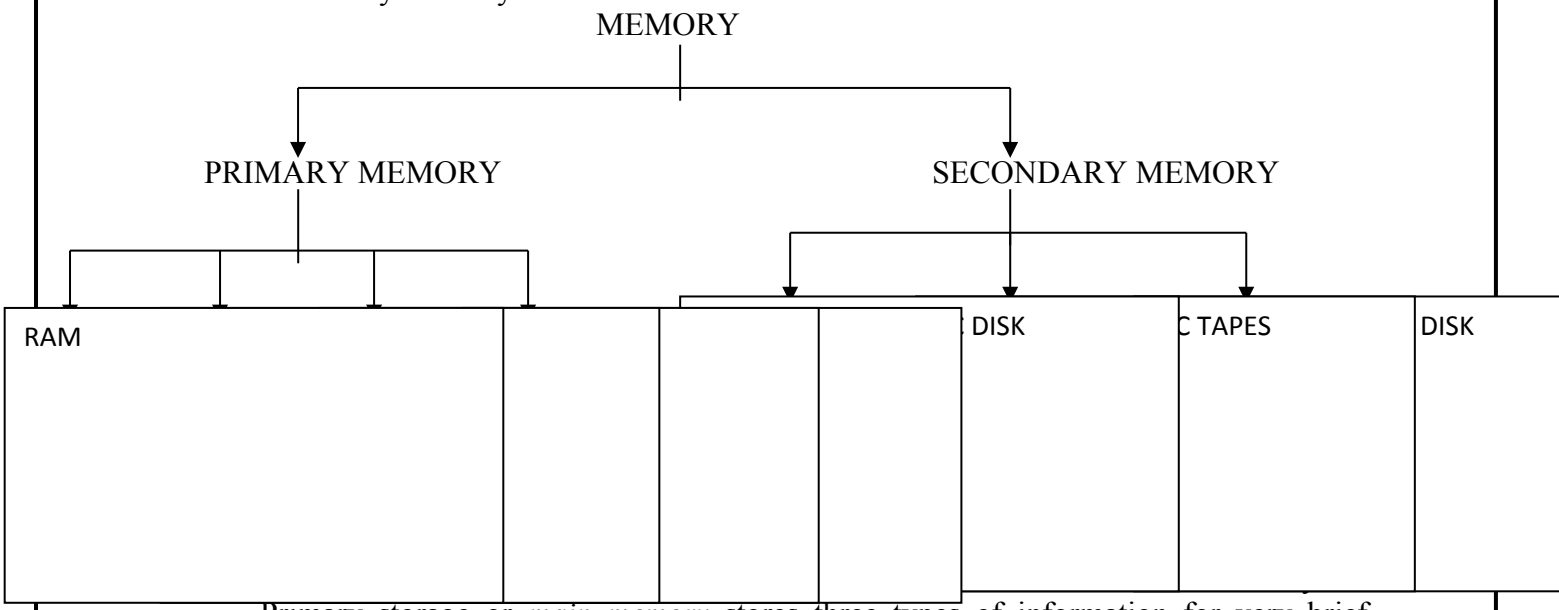

Primary storage or *main memory* stores three types of information for very brief periods of time:

- ✓ Data to be processed by the CPU.
- ✓ Instructions for the CPU as to how to process the data.
- ✓ Operating system programs that manage various aspects of the computer's operation.

There are four main types of primary storage

1. Random access memory (RAM)
2. Read-only memory (ROM).
3. Cache memory and
4. Register

1. Random Access Memory(RAM):

This is that part of primary storage where data and program instructions are held temporarily while being manipulated and executed. It is called Random Access Memory because any of the locations on a chip can be randomly selected and used to directly store and retrieve data and instructions. RAM is volatile i.e. it is depends on a steady supply of electricity and when the power is shut off, everything stored is lost.

Access time in RAM is independent of the address i.e., each storage location inside the memory is as easy to reach as other locations and takes the same amount of time. Data in the RAM can be accessed randomly but it is very expensive.

RAM chip may be classified as:

- **Static RAM chip:** It also provides volatile storage, but as long as it is supplied with power, it needs no special regenerator circuits to retain the stored data. Static RAM chips are more complicated and take up more space than dynamic RAM chips. Therefore, static RAMs are used in specialized applications while dynamic RAMs are used in primary storage section.

Other types of RAM are:

- ✓ SDRAM (Synchronous Dynamic RAM)
- ✓ DDR (Double Data Rate SDRAM)
- ✓ Rambus DRAM (RDRAM)

- **Dynamic RAM chip (DRAM):** DRAM, unlike SRAM, must be continually refreshed in order to maintain the data. This is done by placing the memory on a refresh circuit that rewrites the data several hundred times per second. DRAM is used for most system memory because it is cheap and small.
  Access time 60 – 70 nanoseconds.
  Note: A nanosecond is one billionth of a second! A Dynamic RAM chip provides volatile storage.

2. Read Only Memory (ROM):

Read only memory chip contains the stored data when the supply is cut. Therefore, unlike RAM chips, ROM chips are non-volatile. ROM chip may contain micro program control instructions that cause the machine to perform certain information such as starting the computer or instructions to the Operating System. ROM chip can only read. It does not accept any input data on instructions from user. The manufacturers set the actual contents and they are unchanged and permanent. ROM chips are not only used in the computer but also in other electronic items like washing machine and microwave oven. ROM is mainly of three types:

1. **Programmable read only memory (PROM)** allows a chip to be programmed by the user for converting critical and lengthy operations into micro programs that are fused into a chip. The user buys a blank PROM and enters the desired contents using a PROM program. Inside the PROM chip, there are small fuses, which are burnt open during programming. It can be programmed only once and is not erasable. Once they are in a hardware form, they can be executed at a very high speed and cannot be altered.
2. **Erasable PROM (EPROM)** can be erased and reprogrammed. The EPROM chip has a small window on top allowing it to be erased by exposing it to ultra-violet light for duration of up to 40 minutes. After reprogramming the window is covered to prevent new contents being erased
3. **Electrically Erasable PROM (EEPROM)** is programmed and erased electrically. It can be erased and reprogrammed about ten thousand times. Both erasing and programming take about 4 to 10 ms (milli second). In EEPROM, any location can be selectively erased and programmed. EEPROMs can be erased one byte at a time, rather than erasing the entire chip. Hence, the process of re-programming is flexible but slow.

3. Cache Memory:

Cache memory is typically integrated directly with the CPU chip or placed on a separate chip. Many processors also have built-in specialized storage elements that are used for specific processing and control purposes. A computer microprocessor can access more quickly than it can access regular RAM.

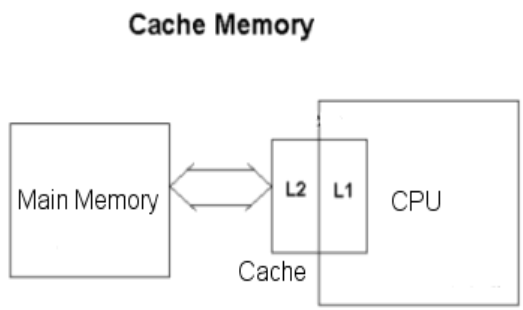

The basic purpose of cache memory is to store program instructions that are

frequently re-referenced by software during operation. Fast access to these instructions increases the overall speed of the software program.

One element used during processing operations is a high speed **Buffer Memory (cache memory),** which is both fast and expensive, as compared to primary storage. It is a small amount of memory typically of 256 or 512 kilobytes.

L1 and L2 are levels of cache memory in a computer. L1 is "level-1" cache memory, usually built onto the microprocessor chip itself. L2 (that is, level 2) cache memory is on a separate chip that can be accessed more quickly than the larger "main" memory.

4. Registers

Registers are a special high-speed storage area within the CPU. All data must be represented in a register before it can be processed. For example, if two numbers are to be multiplied, both numbers must be in registers, and the result is also placed in a register. (The register can contain the address of a memory location where data is stored rather than the actual data itself.)

The number of registers that a CPU has and the size of each (number of bits) help determine the power and speed of a CPU. For example a 32-bit CPU is one in which each register is 32 bits wide. Therefore, each CPU instruction can manipulate 32 bits of data.

The CPU contains a number of special-purpose registers

- **Instruction Register (IR):** The instruction register holds the instruction currently being executed.
- **Memory Data Register (MDR)**: The memory data register (also known as the memory buffer register or data buffer) holds the piece of data that has been fetched from memory.
- **Memory Address Register (MAR)**: The memory address register holds the address of the next piece of memory to be fetched.
- **Program Counter Register (PC):** The program counter holds the location of the next instruction to be fetched from memory. It is automatically incremented between supplying the address of the next instruction and the instruction being executed.
- **Accumulator Register**: The accumulator is an internal CPU register used as the default location to store any calculations performed by the arithmetic and logic unit.

The Differences between RAM and ROM

RAM	Differences	ROM
❖ stores during and after processing	**Data and Program**	❖ stored by manufacturer
❖ stores information temporarily	**Content**	❖ stores information permanently
❖ very fast but uses a lot of power	**Processing Time**	❖ fast but uses very little power
❖ volatility	**Volatile**	❖ non-volatile

2. SECONDARY MEMORY:

Secondary (Auxiliary) storage is the non-volatile memory that is stored externally to the computer. A secondary medium usually used for the storage of large amount of data for permanent or long-term storage of data or programs. While the secondary media can hold much more data than primary storage, access to the data is slower.
The benefits of secondary storage are

- **Capacity**: A simple diskette for a personal computer holds the equivalent of 500 printed pages, or one book. An optical disk can hold the equivalent of approximately 400 books.
- **Reliability**: Data in secondary storage is basically safe, since secondary storage is physically reliable. Also, it is more difficult for unscrupulous people to tamper with data on disk than data stored on paper in a file cabinet.
- **Convenience**: With the help of a computer, authorized people can locate and access data quickly.

Different secondary storage media can be ranked according to the following criteria:

- **Retrieval speed -** The access time of a storage device is the time it takes to locate and retrieve the stored data. A fast access time is preferable for any storage media.
- **Storage capacity**- A device's storage capacity is the ability to store data. A large storage capacity is desired.
- **Cost per bit of capacity**- Low cost is preferred.
- Secondary storage media with all sizes of computers can be broadly categorized into:
    1. Magnetic tape.
    2. Magnetic disk.
    3. Optical disk.

1. Magnetic tape:

Magnetic tape is a one-half or one-fourth inch ribbon of Mylar (a plastic like material) coated with a thin layer of iron-oxide material. It is a medium that is often selected to store large files that are sequentially accessed and processed. Its data density (the number of characters that can be stored in a given physical space) is high and its transfer rate (the speed with which data can be copied into processor storage) is fast.

Advantages**:**

- Low cost and ease of handling.
- High data density

Limitations of Magnetic Tape**:**

- Lack of direct access to records.
- Environmental problems-sensitivity to dust, humidity and temperature levels.

2. Magnetic disk:

A magnetic disk is a Mylar or metallic platter on which electronic data are stored. Unlike magnetic tapes, data on magnetic disks can also be read randomly. The data are recorded as tiny invisible magnetic spots on its iron oxide coating.

It consists of two or more metal platters mounted on central spindle like a stack. Each platter is covered with a magnetic coating, and the entire unit is encased in a sealed chamber. The motor spins the platter and sets the read/write head on the disk to read from or to write on to the disk. The top most layer of the top platter and bottom most layer of the bottom platter is not used to storing a data as they may contain some dust particles. These heads are fastened to an arm in a disk storage device so that they can be moved quickly and directly to any disk location to store or retrieve data.

The surface of the magnetic disk is divided into number of invisible concentric circles called "tracks". The tracks are further subdivided into "sectors", "blocks" etc. each its own unique addresses to facilitate the location of data. Disk moves on a vertical rotating spindle. Data on magnetic disks can be read randomly.

The access time for data stored on a magnetic disk is determined by two factors:

1. The **seek time** i.e. the time required for positioning read/write head over the proper track.
2. The **search time** i.e. the time required for spinning the r

Magnetic disks come in various sizes. They can be portable or permanently mounted in their storage devices, disk drives. They can be made of rigid metal (Hard Disks) or flexible plastic (Floppy Diskettes).

Advantages of Magnetic Disk

- Data records can be stored for both sequential and direct-accessing.
- High speed of access and update as no sorting of transactions.
- On-line disk records of several related files can be updated simultaneously by a single input transaction.

Limitations of Magnetic Disk

1. Risk of loss of data – Records may be lost in case of writing of new records or drive failure. Therefore, special backup procedures are required for disk records protection. This is not so in the case of magnetic tape records.
2. Data insecurity – It is easier to maintain the security of magnetic tape files than that of magnetic disk files.

3. Optical Technology:

Optical technology involves the use of laser beams highly concentrated beams of light. It comes in the form of Optical laser disk, Optical card and Optical tape.

Optical Laser Disk: A common version of the optical disk is the CD-ROM (compact disk, read–only memory). While not suited to applications where data changes, they are very convenient for storing data that remains constant. CD-ROM [Compact Disc Read Only Memory] is a Compact Disc contains data accessible by a computer.

- The CD-ROM is also known as a laser disc, which is shiny metal like disk. The diameter of the disk is 5.25 inches (or) 12 cm disk. Information of 650 MB can be stored, which is equal to nearly 2, 50,000 pages of printed text.
- The data is recorded as deep holes on the disk surface or burning microscopic bits.
- CD-ROMs are popularly used to distribute computer software, including games and multimedia applications, though any data can be stored.
- The CD-ROM s are pre-recorded disks used for storing a large amount of data (or) information.

Optical Card: The Optical card, or laser card, is the size of a credit card and has an optical laser-encoded strip that can store approximately 2 megabytes of data. These cards have many potential uses, most notably for storing credit records or medical histories.

Optical Tape: Optical tape is similar in appearance to magnetic tape, but data are stored by optical laser techniques. Optical tapes, which are in cassette form, can store over 8 gigabytes each providing a total storage of about 1 terabyte (1,000 gigabytes). Like other optical methods of data storage, optical tape is read only.

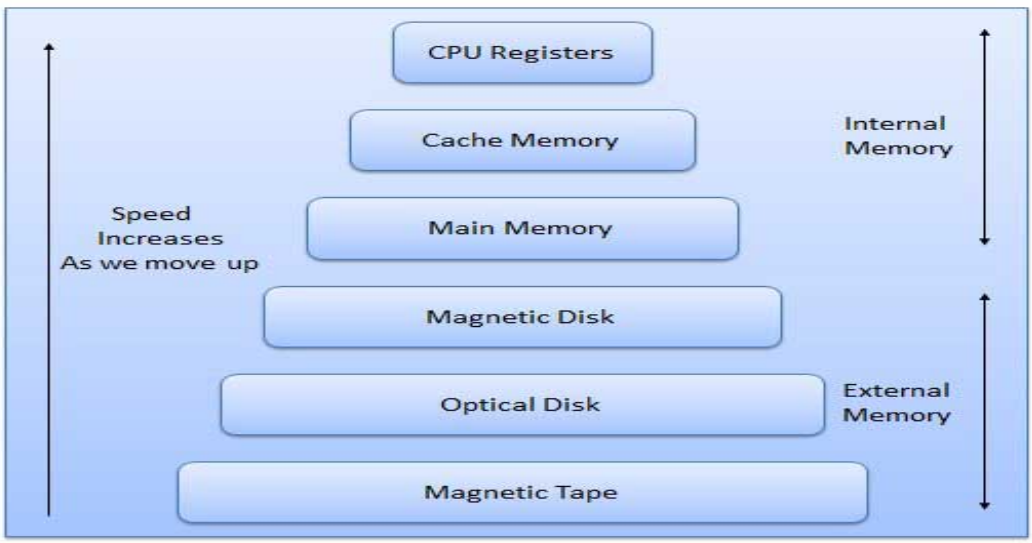

INPUT AND OUTPUT DEVICES:

The CPU provides the means for the fast and efficient processing of data into usable information. For computer processing, data needs to be entered into the computer (input) and the result of processing needs to be communicated to the user (output).

Any hardware item which is attached to the main unit of a computer that houses the CPU is referred to as a **Peripheral Device**.

- **INPUT**: Input is the process of entering and translating incoming data in machine-readable form. The data to be entered are often referred as input. Input process involves data preparation, processing and accuracy checks.
  There are two types of input device: manual and automatic.

- A **Manual Input Device** requires a human hand to control i.e. (Mouse, Keyboard, Scanner, Camera, track ball, joystick, and Graphics tablet.)
- An **Automatic Input Device** inputs data without the need for human intervention (once the device has been set up), e.g. MICR, OMR, barcode reader, webcam, microphone.

➢ **OUTPUT:** The result of processing is also often referred as output.
Output is divided into two general categories:
Output that can be readily understood and used by humans.
Output to secondary storage devices that hold the data to be used as input for further processing by computer.
Output that can be understood by humans can be in the form two types: Hard copy & Soft copy.

- **Hard Copy** is the output on paper and can be read immediately or stored and read later. This is a relatively stable and permanent form of output.
- **Soft Copy** is usually a screen-displayed output. It is a transient form of output and is lost when the computer is turned off.

INPUT DEVICES:

An input device is a peripheral device through which data are entered and transformed into machine-readable form. Let us have a look at various input devices available.

1. Keyboards

Standard keyboard is the most common and familiar input device. A typical computer keyboard contains all letters, numbers, symbols of a regular typewriter, plus other keys.

S.No.	Keys	Description
1	Typing Keys	These keys include the letter keys (A-Z) and digits keys (0-9) which generally give same layout as that of typewriters.
2	Numeric Keypad	It is used to enter numeric data or cursor movement. Generally, it consists of a set of 17 keys that are laid out in the same configuration used by most adding machine and calculators.
3	Function Keys	The twelve functions keys are present on the keyboard. These are arranged in a row along the top of the keyboard. Each function key has unique meaning and is used for some specific purpose.
4	Control keys	These keys provide cursor and screen control. It includes four directional arrow key. Control keys also include Home, End, Insert, Delete, Page Up, Page Down, Control(Ctrl), Alternate(Alt), Escape(Esc).
5	Special Purpose Keys	Keyboard also contains some special purpose keys such as Enter, Shift, Caps Lock, Num Lock, Space bar, Tab, and Print Screen.

Every key on the keyboard underneath it consists of a tiny chip called as keyboard controller, when a key is pressed the controller places the code into the part of the memory called keyboard buffer. The buffer temporarily holds the data till it is processed. The signal the keyboard sends to the computer is called as interrupt. The keyboard sends an interrupt request to the system software and the data is processed.

2. Mouse

A mouse is a pointing device. It usually contains one or three buttons: as the user rolls it on a flat surface, the mouse controls cursor movement on the screen. When the user presses one of the buttons, the mouse either marks a place on the screen or makes selections from data on the screen. It can be used for many applications ranging from games to designing products with graphics. It can be used as an alternative to keyboard or it can be used in combination with a keyboard to enhance input operations.

Advantages:

- Easy to use
- Not very expensive
- Moves the cursor faster than the arrow keys of keyboard.

3. Joystick

A joystick is a most popular input device used to play video games. A joystick uses a level to control the position and speed with which the joystick is moved into digital signals that are sent to the computer to control the cursor movement.

4. Track Ball

A track ball uses a hard sphere to control cursor movement. The ball can be rotated by hand in any direction. The track ball translated the sphere's direction and speed of rotation into a digital signal, used to control the cursor.

5. Touch Screen

A touch screen registers input when a finger or other object comes in beams and ultrasonic acoustic waves. Infrared beams crisscross the surface of the screen and when a light beam is broken, that location is recorded.

6. Light Pen

A light pen is also a pointing device like mouse. It can be used to choose a displayed menu option. The pen contains a photocell placed in a small tube. As the user moves the tip of the pen over the surface of the screen, it detects the light coming from a limited field of view. The light from the screen causes the photocell to respond and this electric response is transmitted to the process, which can identify the menu option that is triggering the photocell. Light pen is useful for graphics work, especially for Computer Aided Design (CAD) purposes.

7. Magnetic Ink Character Recognition (MICR)

Magnetic Ink Character Recognition (MICR) is an interpretation by computer of a line of character written in special magnetic ink. These characters can be read by human eye as well. There are several advantages associated with the use of MICR:

- Checks may be roughly handled, folded, smeared, and stamped. But they can still be read with a high degree of accuracy.
- People can easily read the magnetic ink characters.

The main limitation of MICR is that only the 10 digits and 4 special characters needed for bank processing are used. No alphabetic characters are available.

8. Magnetic strips

They are thin bands of magnetically encoded data that are found at the back of usually, Credit cards, Debit cards etc. the data stored on the card vary from application to another. Data in the form of magnetic strips cannot be seen or interpreted by simply looking at the card and so it can be highly sensitive or personal.

9. Optical Recognition / Scanners

Optical Recognition when a device scans a printed surface and translates the image the scanner sees into a machine-readable format that is understandable by the computer. Optical Recognition can be of the following types

i. Optical Mark Recognition (OMR)

It uses mark sensing to scan and translate, based on its location, which is a series of pen or pencil marks into a computer readable form. For instance, the objective type multiple choice question paper we get in the bank recruitment exam. A computerized optical mark reader scores the tests by identifying the position of the mark

ii. Optical Bar Recognition (OBR)

This is slightly more sophisticated type of optical recognition. An optical bar reader recognizes and interprets bar codes or product codes which are arranged to represent data, such as the name of the manufacturer, and the type of the product etc. on the basis of the width of the lines. A scanner reads the bar code, and the computer then matches the price and product.

iii. Optical character recognition (OCR)

This is most sophisticated type of optical recognition. An optical card reader works in much the same way as a human eye. It recognizes specially shaped numerical and alphabetic characters.

10. Microphone

A microphone can be attached to a computer to record sound (usually through a sound card input or circuitry built into the motherboard). The sound is digitized—turned into numbers that represent the original analog sound waves—and stored in the computer for later processing and playback.

OUTPUT DEVICES:

An **Output Device** is a peripheral device that allows a computer to communicate information to humans or another machine by accepting data from the computer and transforming them into a usable form.

1. Visual Display Unit (Monitor)

A monitor is a television like device used to display input data or information, allowing users to view the results of processing. The combination of monitor with the keyboard is called a terminal.

Quality of a monitor often judged as in terms of resolution, which is a measure of the number of picture elements, or pixels, a screen, contains. A **pixel** is the smallest increment of a display screen that can be controlled individually. The higher the number of pixels, the clearer and sharper is the image. Screens for the monitor are of two types:

1. **Cathode Ray Tube (CRT):** On this type of screen, a data image can be produced by moving an electron beam across a phosphor-coated screen. CRT has display screen 25 lines of 80 characters each. It is used in most desktop monitors. Some CRT screens are monochrome (1 color) while other produce many color.
2. **Flat Panel Display:** To overcome the limitation of CRT like bulky in size, high power consumption, flickering screen Flat panel display is used. The most common form of flat panel display is the Liquid Crystal Display (LCD), which produces images by aligning molecular crystals and an **LED display** which uses an array of light-emitting diodes as a video display. An **LED panel** is a small display, or a component of a larger display.

2. **Printer**

Produces output usually in the form of text on a paper.
Printers are classified based on the contact between the printer head and the paper into

- Impact printers
- Non Impact printers

Impact printers:
Impact Printers use a print head containing a number of metal pins which strike an inked ribbon placed between the print head and the paper.

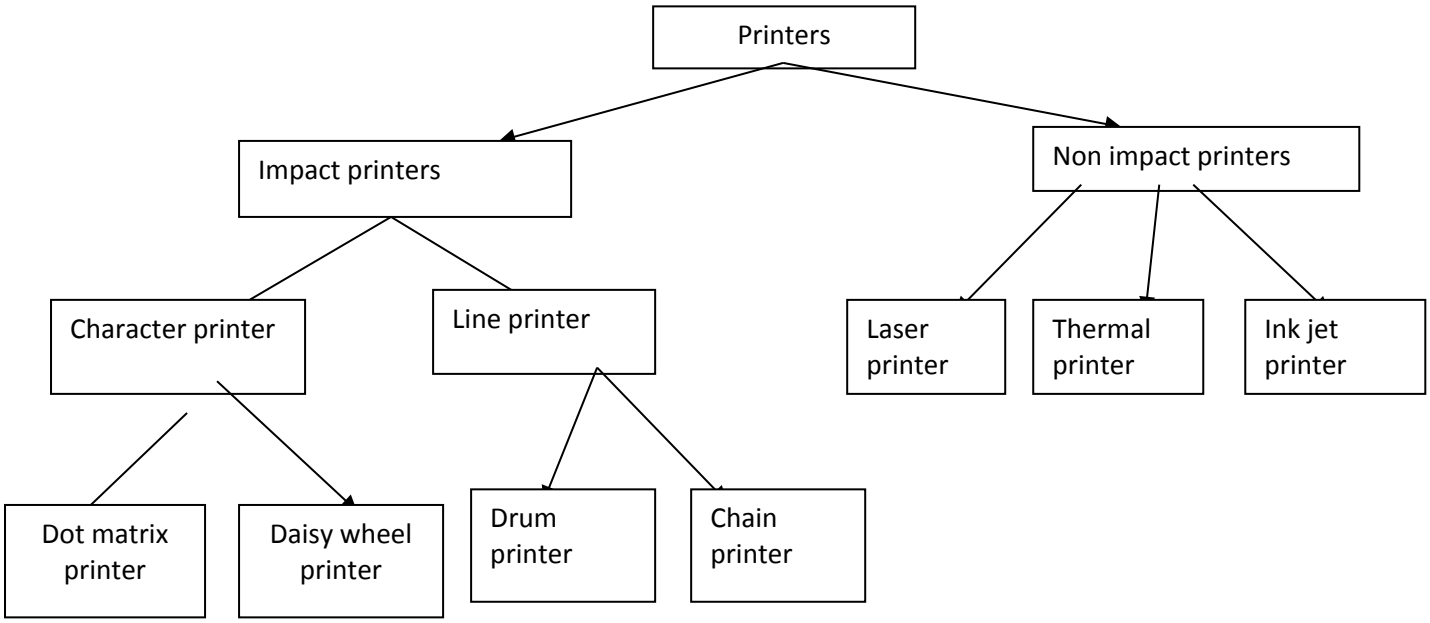

Character Printers: Character printers print character by character. The different character printers are:
Dot Matrix
Daisy Wheel

Dot Matrix Printer

It uses printer heads containing a 9-24 pins these pins produced pattern of dots on the paper to form a character. Dot matrix printers are very popular as they are relatively inexpensive and typically print at speed of 100-600 characters per second. These printers can give us draft quality, standard quality and near letter quality prints

Daisy Wheel Printer: This printer gives us letter quality print but is slow, typically 25 to 55 characters per second. It is a circular printing element which has a plastic or metal wheel on which the shape of each character stands out in relief. A hammer presses the wheel against a ribbon, which in turn makes an ink stain in the shape of the character on the paper. Daisy-wheel printers produce letter-quality print but cannot print graphics.

Line Printers: The line printer is a form of high speed impact printer in which one line of type is printed at a time. Print speeds of 600 to 1200 lines-per-minute (approximately 10 to 20 pages per minute. Types of line printers

- Drum Printer
- Chain Printer

Typical typeface of a drum printer with staggered characters.
A fixed font character set is engraved onto the periphery of a number of print wheels.

The wheels, joined to form a large drum (cylinder), spin at high speed and paper and an inked ribbon is stepped (moved) past the print position. As the desired character for each column passes the print position, a hammer strikes the paper from the rear and presses the paper against the ribbon and the drum, causing the desired character to be recorded on the continuous paper.

Non Impact Printers:

Non-impact printers are much quieter than impact printers as their printing heads do not strike the paper. The main types of non-impact printer are:

- Thermal Printer
- Laser Printer
- Ink Jet Printer

1. **Thermal Printer**

   Characters are formed by heated elements being placed in contact with special heat sensitive paper forming darkened dots when the elements reach a critical temperature.

2. **Laser Printer**

   When speed and quality are required and cost is no factor a laser printer is the solution. They produce images on paper by directing a laser beam at a minor, which bounces the beam on to a drum. The laser leaves a negative charge on the drum to which positively charged black toner powder will stick. As the paper rolls by the drum, the toner is transferred to the paper. Laser printer uses buffer to store an entire page at a time that is why they print very fast at rate of approximately 21,000 lines or 437 pages per minute.

3. **Ink-Jet Printer**

   Ink-Jet printer forms character on paper by spraying ink from tiny nozzles through an electrical field that arranges the charged ink particles into characters at the rate of approximately 250 characters per second. The ink is absorbed into the paper and dries instantly. Various colors of ink can be used. Although this might sound like a messy way of printing, ink-jet printers are reliable, but expensive.

3. Plotter

A Plotter reproduces drawings using pen that are attached to movable arms. The pens are directed across the surface of a stationary piece of paper. High quality bar graphs, pie charts created with a plotter give a very good quality product.

4. Sound Card and Speakers

A sound card captures sounds and changes them into digital binary numbers that are stored as files in your computer.

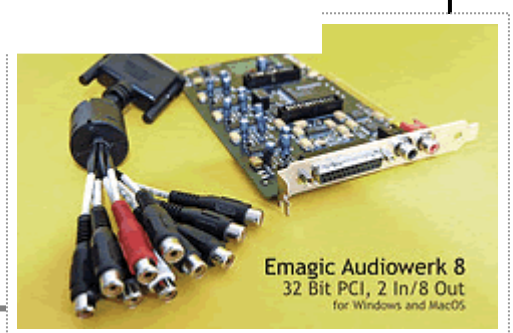

When outputting sounds the sound card reverses the process and changes binary data held in the sound files into analogue signals that are used control the speakers attached to the computer. Speakers convert analogue audio signals into the equivalent air

vibrations in order to make audible sound. A pair of speakers plugs into the computer's sound card.

5. Projector

Projector may refer to:

- Image projector, a device that projects an image on a surface 3D projection, a method of mapping three-dimensional points to a two-dimensional plane.
- Video projector, a device that projects a video signal from computer, home theater system etc.
- Movie projector, a device that projects moving pictures from a filmstrip Slide projector.